B1000-D
MOTORCYCLE SCISSOR LIFT

USER MANUAL

2025

B1000-D
MOTORCYCLE SCISSOR LIFT

CONTENT

1. Safety

1.1 Note, Caution and Warning

1.2 Important Information

1.3 Safety Instructions

2. Technical Manual

2.1 Product Description

2.2 Technical Data

2.3 Hydraulic Scheme

2.4 Circuit Diagram

3. Preparing and installation

3.1 Site Selection

3.2 Surface Condition

3.3 Installation Instruction

3.4 Preparation for Starting up

4. Operation

4.1 Caution and Warning Label

4.2 Operation Instructions

5. Maintenance Instructions

6. Parts Drawing and Parts Code List

7. Trouble Shooting Guide

B1000-D
MOTORCYCLE SCISSOR LIFT

1. Safety Information

1.1 Note, Caution and Warning

This document uses the following conventions—Note, Caution and Warning – to alert you to special instructions, tips, or hazards for a given procedure. Please familiarize yourself with the conventions described below.

NOTE

Indicates important information that requires special attention, such as a procedure for a specific vehicle, or tips on operating the equipment.

CAUTION

Indicates the potential for damage to equipment, accessories, or the vehicle unless you follow the instructions or procedure exactly.

WARNING

Indicates the potential for property damage, personal injury, or death due to hazards associated with the equipment, vehicle, or environment. Do no perform any procedure until you have read and understood the warning instructions.

1.2 Important Information

1. Carefully read this manual thoroughly before installing, operating, or maintaining this lift.
2. This lift is designed for indoor use only, and should not be installed in a pit or depression.
3. The lifts have specific electrical requirements as described in the Installation Instructions section of this manual.
4. This lift has a minimum ceiling height requirement as described in the Installation Instructions section of this manual.
5. Failure by the owner to provide the **recommended shelter, mounting surface, electrical supply, and ceiling height** could result in unsatisfactory lift performance, property damage, or personal injury.
6. The operation of the lift is permitted by authorized person only.
7. Keep this guide as well as all the supplied technical literature in a safe place close to the lift so that operators are able to read it whenever necessary.
8. If any confusion, please contact the service provider or your distributor.

1.3 Safety Instructions

1. **Do not** raise a vehicle on the lift until the initialization is completed as described in this manual.
2. Technicians should be trained to use and care for the lift by familiarizing themselves with the publications listed above. The lift should **never be operated by an untrained person.**
3. Always position the pads properly out of the way before pulling the vehicle into, or out of the bay. Failure to do so could damage the vehicle and/or the lift.
4. **Do not overload the lift.** The capacity of the lift is shown on cover of this document and on the lift's serial number tag
5. Positioning the vehicle is very important. Only trained technicians should position the vehicle on the lift. **Never allow anyone to stand in the path of the vehicle as it is being positioned and never raise vehicle with passengers inside.**
6. Position the pads to the vehicle manufacturer's recommended pickup points. Raise the lift until contact is made with the vehicle. Make sure that the pads and the ramps have properly engaged the vehicle before raising the lift to a working height.
7. Keep everyone clear of the lift when the lift is moving, the locking mechanism is disengaged, or the vehicle is in danger of falling.
8. Unauthorized personnel should never be in the shop area when the lift is in use.
9. Inspect the lift daily. **The lift should never be operated if it has damaged components, or is malfunctioning.** Only qualified technicians should service the lift. **Replace damaged components with manufacturer's parts, or equivalent.**
10. **Keep the area around the lift clear of obstacles.**
11. **Never override the self-returning lift controls.**
12. Avoid excessive rocking of the vehicle when it is on the lift.
13. To reduce the risk of personal injury, keep hair, loose clothing, fingers, and all body parts away from moving parts.
14. To reduce the risk of electric shock, **do not** use the lift when wet, do not expose the lift to
15. To reduce the risk of fire, **do not** operate equipment in the vicinity of open containers of flammable liquids (gasoline).

16. Use the lift only as described in this manual, **use only manufacturer's recommended attachments.**

17. **Unusual vehicles, such as limousines, RV's, and long wheelbase vehicles, may not be suitable for lifting on this equipment.** If necessary, consult with the manufacturer or the manufacturer's representative.

18. The maintenance procedures described in this manual can be done by the lift's owner/employer. Any other procedure should only be performed by trained lift service personnel. **These restricted procedures include, but are not limited to, the following: cylinder replacement, platform and safety latch replacement, motor replacement, control board replacement, oil replacement and refilling, lubrication.**

19. Anyone who will be in the vicinity of the lift when it is in use should familiarize themselves with following Caution, Warning, and Safety related decals supplied with this lift, and replace them if the are illegible or missing.

20. Travelling on the load carry device is forbidden.

21. Never move the lift when the vehicle is loaded.

22. Only use on a level ground.

23. Wear necessary protective equipments before use.

24. Only remove the vehicle when the lift carrier locates at the lowest position.

25. Never lift the vehicle with person's riding on it.

B1000-D
MOTORCYCLE SCISSOR LIFT

IMPORTANT INSTRUCTIONS

- The operation of the lift is permitted by authorised persons only.
- The lift is used for indoor only and should be placed on the flat ground.
- It shall draw attention to the rule that the load carrying device shall beobserved by the operator throughout the motion of the lift.
- It is forbidden for people to stand in the field of motion of the load and the load carrying device during the movement, if appropriate.
- It is forbidden to climb onto the load or load carrying device when they are raised unless via a specifically designed access.

IMPORTANT INSTRUCTIONS

- Movable and mobile lifts shall be prevented from moving unintentionally.
- It is necessary to refer to the complete operation instructions, especially for trouble shooting.
- The field of motion of the load and of the load carrying devices shall be free of obstructions.
- It shall draw attention to the safe method of carrying the load and to the rule that, after raising a short distance, the vehicle shall be checked to ensure that it is correctly and safely positioned.

2. Technical Specifiaction

2.1 Product Description

The 243156EC motorcycle & ATV lift is used for repairing and maintaining motorcycles by AC power source incorporating the latest safety technologies. Its plug connector accords with European standard and VDE rated. Designed and manufactured for a lifting capacity of 1,000kg, is fully capable for lifting motorcycles, ATVs and safely holding them in an elevated position.

It consists of a fixed structural scissor lift and a remote controller.

2.2 Technical Data

Capacity	1,000 kg
Lifting Height, Max	1,200 mm
Height, Min	180 mm
Width Overall	800 mm
Platform Length, Max	2,250 mm
Platform Width	800 mm
Electric Supply Tolerance	±10%，±1HZ
Power Unit	240V, 50Hz, 10A, 1.1KW
Ambient Air Temperature	+5℃ ~ +40℃
Ambient Air Humidity	30% ~ 95%
Altitude	below 1,000m above sea level
Storage Temperature	-25℃ ~ +55℃
Noise	<70db
Motorcycle Wheel Width	75~160mm
Net Weight	265Kg

B1000-D
MOTORCYCLE SCISSOR LIFT

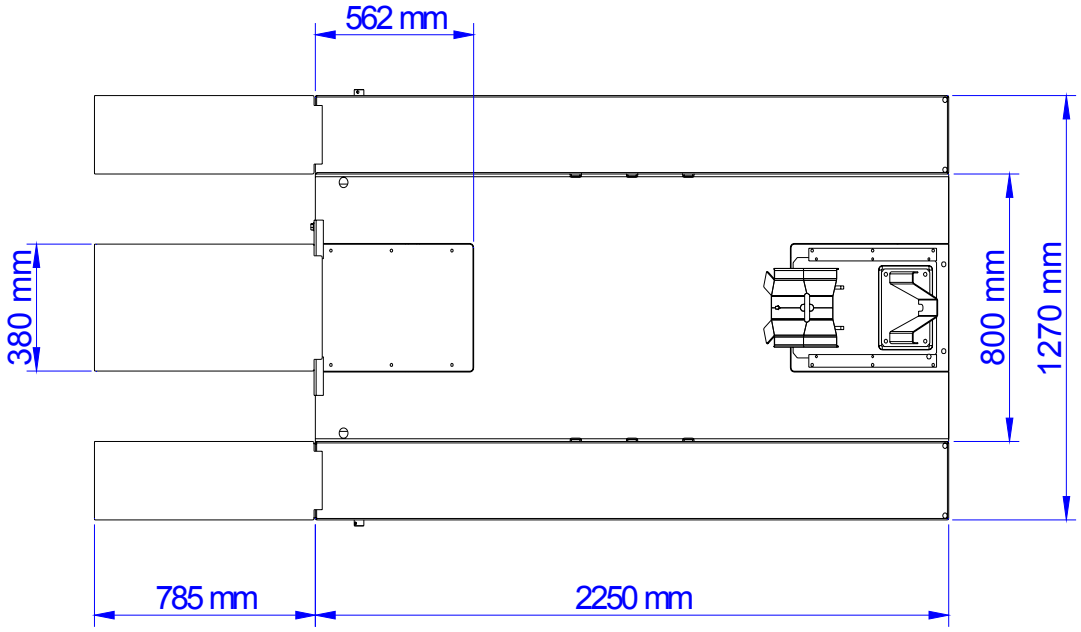

Fig. 1

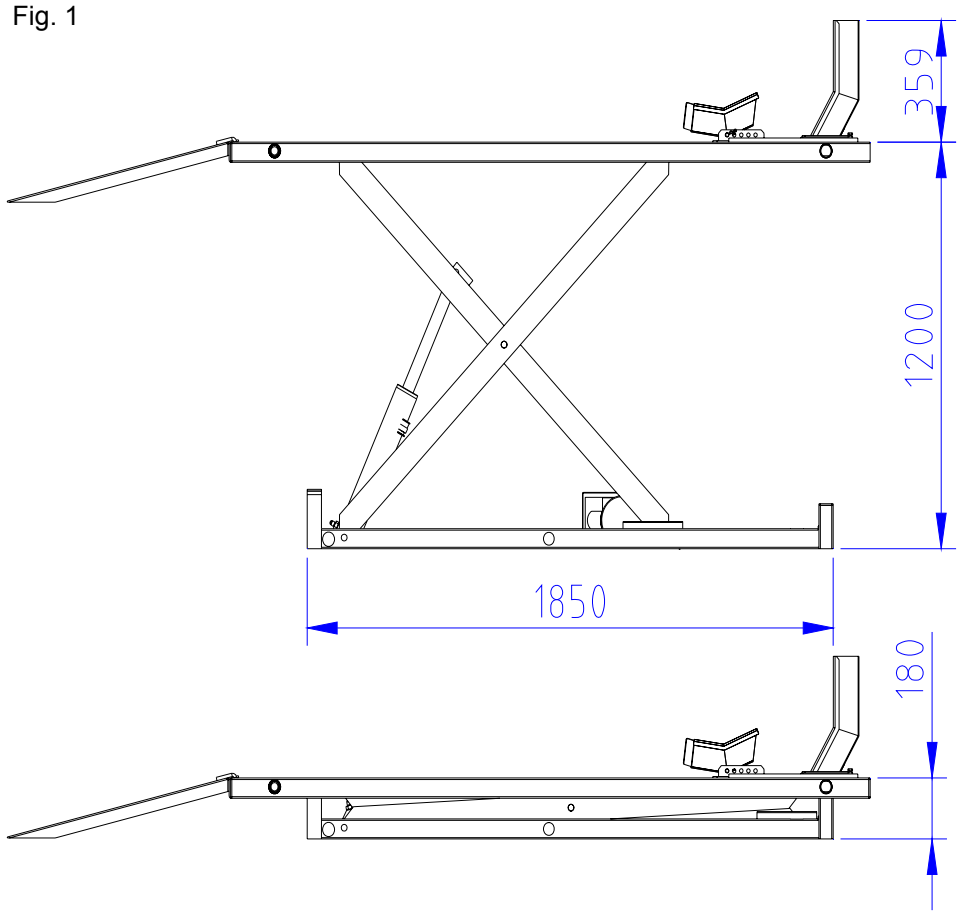

R S Workshop Equipment Unit 28, Barnwell Manor Industrial Estate, Barnwell
01832 741007 - rsworkshopequipment.co.uk

2.3 Hydraulic Scheme

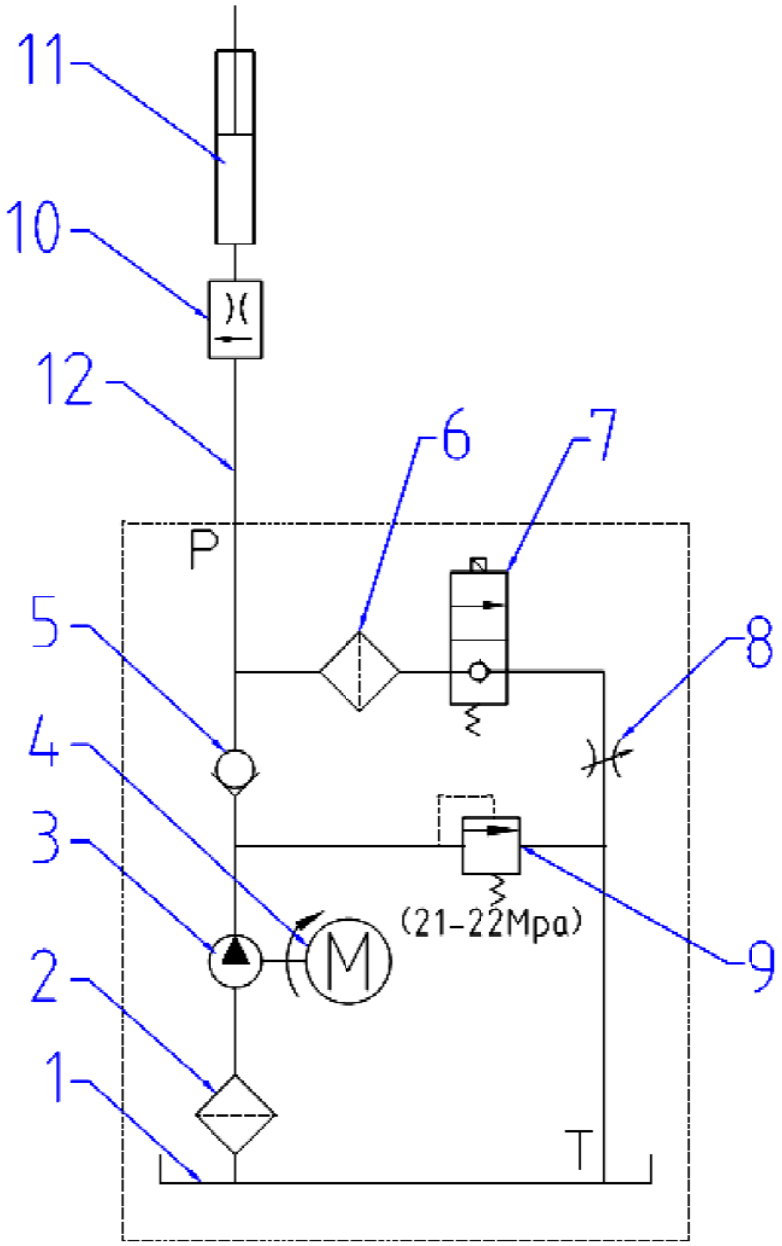

1. Oil tank	2. Mesh	3. Gear pump	4. Motor
5. One-way valve	6. Mesh	7. Solenoid valve	8. Restrictor valve
9. Relief valve	10. Restrictor valve	11. Cylinder	12. Pipe

Fig. 2

B1000-D
MOTORCYCLE SCISSOR LIFT

2.4 Circuit Diagram

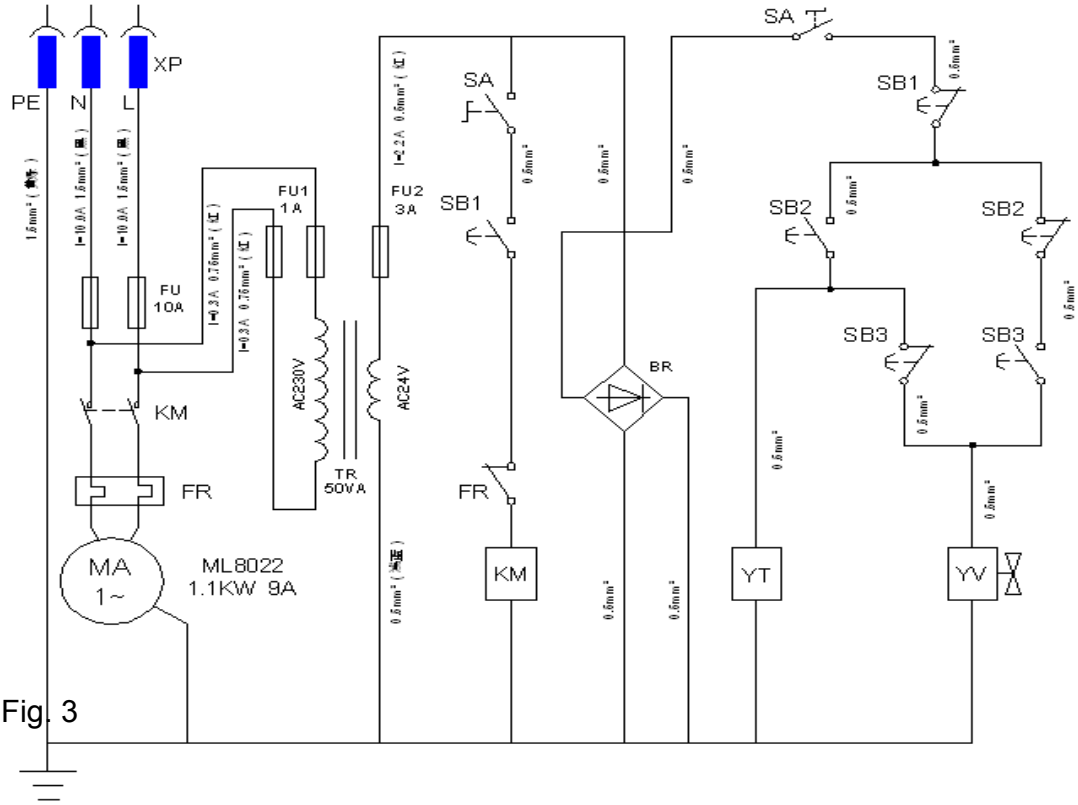

Fig. 3

Item	Name	Type and Specifications	Qty.
SB1	switch	LA42P 220V 10A	3
SB2	switch	LA42P 220V 10A	
SB3	switch	LA42P 220V 10A	
SA	switch	LA42MY 220V 10A	1
KM	AC contactor	NC1-09/10-24VAC 400V 9A	1
FR	Overload relay	TA25DU	1
TR	transformer	ABL6TS06B	1
BR	bridge rectifier	KBPC1010 1A 1000V	1
FU1	Fuse	ϕ 5×20 delay 1A	2
FU2	Fuse	ϕ 5×20 delay 3.15A	1
FU	Fuses	ϕ 6×30 delay 10A	2
MA1	AC motor	ML802-4F, 1PH/230V/50Hz,1.1KW	1
YV	electromagnet	TAU1564T 24VDC 520mA	2
YT	Solenoid valve	24VDC 1A	1

3. Preparing and installation

3.1. Site Selection

The hydraulic motorcycle lift is designed only for indoor use. Application in a room with explosion hazard is not permitted. Setting in a wet place, a car wash center for instance, is forbidden.

3.2. Surface Condition

The lift should be installed on level ground with a concrete surface free from as many defects as possible to prevent unit from tipping or rocking.

CAUTION Failure in accomplish the foundation requirement may cause the lift instability or personal injury. Installing on asphalt, soft clay floor or near the expansion gap is prohibited.

3.3. Necessary Tools

Rubber Hammer, Sockets and Open End Wrenches. Ratchet Driver, Vice Grips

3.4. Personal Protective Equipment

Always wear proper protective Equipment like working suit, shoes, gloves & glasses, etc.

3.5. Installation Instruction

1. **Unpacking**

Open the carton. Using a forklift to take out the bench then move to desired position (Fig. 4a, 4b) and the lift up the upper platform.

Fig.4a

Fig. 4b

Fig. 5

2. **Assembling**

a. Loosely attach the vice rails in the appropriate holes in the front deck of lift (Fig.5).

b. Insert wheel vice base into the rails and make certain there is clearance to allow a smooth sliding motion (Fig. 6).

c. Bolt the rails to the deck. Then mount on the wheel vice.(Fig. 7).

d. Insert the sideboard bar into the side holes. Bolt them with bolts. (Fig.8,9,10)

e. Put on the side board and the rear ramps. (Fig 11)

Fig. 6

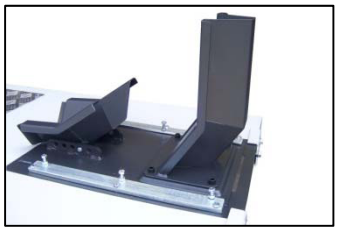

Fig. 7

Fig. 8

Fig. 9

Fig. 10

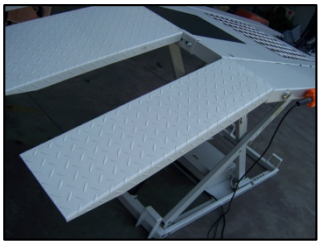

Fig. 11

3. **Fill the tank and change the tank plug**

a. Fill the tank with 6 liter of hydraulic oil AW32 OR AW46.

b. Change the tank plug(black) with a ventilating one (brass). (Fig. 12)

4. **Power Hooking**

Have a certificate electrician establish a 230V/50Hz/10A power supply to the motor through the plug. A protection against indirect contact (RCCB) shall be provided by the user.

3.6. Starting up

1. Raise the platform to full height by pressing the UP button.

2. Lower the lift to floor by press DOWN button.

3. Circle up and down for several times with stop for 2 min to get air out from the hydraulic system.

Fig.13

Note: While doing, no load is on the platform.

Now the lift is ready for operating.

4. Operation

Be sure to read and familiarize yourself with the Safety Instructions at the beginning of this manual. Be sure to wear gloves, protection glasses and all necessary personal protective equipments. Failure to follow Safety Instructions may result in property damage, personal injury or death.

4.1 Caution and Warning Label

4.2 Operating Instructions

Be sure to read and familiarize yourself with the Safety Instructions at the beginning of this manual. Failure to follow Safety Instructions may result in proper damage, personal injury or death.

To avoid personal injury and/or property damage, permit only trained personnel to operate lift. After reviewing these instructions, get familiar with lift controls by running the lift through a few cycles before loading vehicle on the lift.

DO NOT leave ramp attached to lift while in operation or in up position.

ALWAYS use tie downs to secure vehicle to lift while operation.

4.2.1 Lift Preparation:

Lift must be fully lowered and fields clear of all personnel before the vehicles brought on lift.

4.2.2 Loading Lift:

Push the equipment over the lift while keeping the equipment parallel with the lift and aligning the center of gravity of the equipment with the center of the lift. For motorcycles and other two wheel vehicles/equipment, push forward until the front wheel goes into the wheel clamps.

NOTE

Motorcycle Fixing. Engage the parking break of the equipment if applicable. Secure motorcycle to lift using clamps and straps. Straps MUST be used to secure motorcycle. Clamps are only for temporary holding.

4.2.3 Power Connection

Plug in the socket once the lift is proper located. Be sure to wear gloves before starting up.

4.2.4 Emergency button

Release the emergency button on the remote controller.

4.2.5 To Raise Lift

a. Push UP button ( ) on the controller.

b. Raise vehicle until the clear the floor, then release the UP button.

c. Check wheel clamps and secure straps.

d. Continue to raise to desired height only if vehicle is secure on lift

e. Push the PARKING button ( ) to lower the platform into the locking position and the locking latches will be engaged.

CAUTION

When any emergency situation comes, press down the red emergency stop button immediately to stop the vehicle lift. When all emergencies are solved, turn the key clockwise to disengage the emergency stop.

WARNING

Before attempting to lift pickup ATVs, be sure that vehicle is stable and proper secured on lift

4.2.6 To Lower Lift

a. Check all danger points of the lift and be sure that there are no objects or people in the working area (danger area) around the lift or under the lift.

b. If the platform already in lock position (latches are engaged), press UP button 2 seconds to raise up the platform a little. The latches will be released.

B1000-D
MOTORCYCLE SCISSOR LIFT

c. Then press DOWN button ( ) on controller to lower down the lift to the required working height or to its lowest (fully collapsed) position.

d. Observe the complete lowering process for any unexpected movement.

e. Push back the vehicle out of the lift if the lift is in the lowest position.

f. Remove any tools or stands from under vehicle before moving vehicle

WARNING **Remain clear of lift when lowering vehicle. Observe pinch point warning decals. If lift is not operating properly, DO NOT use until adjustment or repairs are made by qualified lift service personnel.**

WARNING **DO NOT using the PARKING button instead of the DOWN button**

WARNING **NEVER press UP or DOWN button for a long time while the lift is not moving, or the whole control system will be damaged. Relief the button if you find the lift is not responding to the button actuated.**

CAUTION **Once finished operation, switch off the power supply, engage the emergency button and unplug the lift.**

CAUTION **If any unsafe movement of the lift happens, do not to operate the lift anymore and call the local distributor for assistance**

4.27 To lower the wheel clamp with wheel

a. If the motorcycle wheel need to be taken off, first loose the nuts on the wheel shaft and rest the wheel on the clamp.

b. Loose the bolts on the platform end of the wheel board. Then move them aside with hand hold the wheel clamp base.

c. Lower the base together with the wheel slowly. It will be easy to do service job of the wheel.

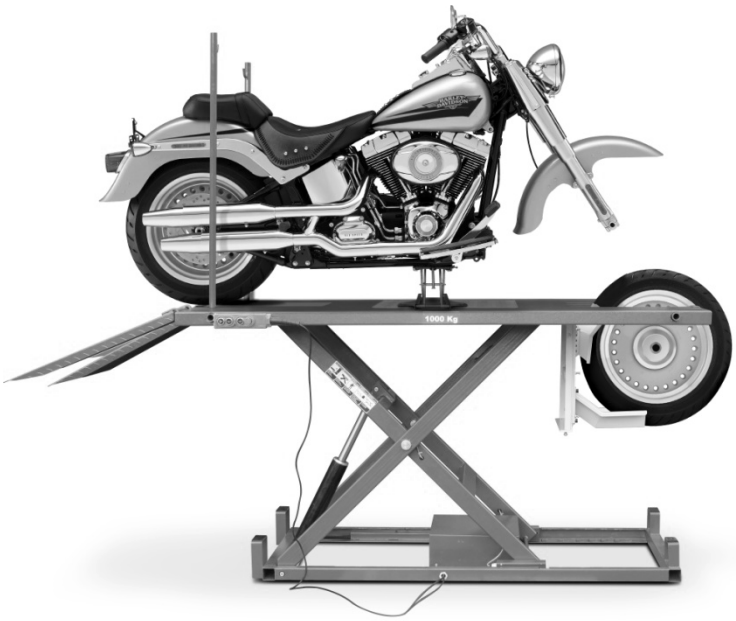

5. Maintenance Instructions

Contact your service provider for instruction before starting up if you are not completely familiar with automotive lift maintenance procedures. Only qualified personnel can perform maintenance on this equipment. Any failure in operation may cause personal injury or death.

- ✓ Wear necessary protective equipments before use, includes, but not limited, gloves and protection glasses, working suits and shoes.
- ✓ Always keep bolts tight. Check periodically.
- ✓ Always keep lift components clean.
- ✓ Always if oil leakage is observed, contact your service provider.
- ✓ Check safety latches for free movement and full engagement with lift are working
- ✓ Check hoses connections for leakage.

Every Month

- ✓ Lubricate locking latch shafts. Push latch handle several times for oil to penetrate joints.
- ✓ Lubricate the sliding pieces with heavy duty bearing grease.
- ✓ With lift lowered check the hydraulic fluid level. If necessary add oil as described in the Installation Instruction section of this manual
- ✓ Check platform latch synching: Latches should click at the same time. If necessary adjust equalization cables as described in the Installation Instruction section of this manual.
- ✓ Check tightness of all bolts.
- ✓ Check the nuts for tightness every week for the first month, and every month afterwards.

Every 3 Months

- ✓ Check and clean the oil filter

Every 6 Months

- ✓ Check the hydraulic oil if it is enough. Ensure the liquid level of the hydraulic oil that under the max graduation and above the min graduation. The tank capacity of the power unit is about 3L, Refill with hydraulic oil if necessary: AW 32 or 46 Non-Detergent Non-Foaming Anti-Wear Hydraulic Oil.
- ✓ If Lift stops short of full rise or chatters, contact your service provider.
- ✓ Replace all caution, warning or safety related decals on the lift If unable to read or missing. Reorder labels from service provider.
- ✓ Check all components wear situation.

6. Parts Drawing and Parts Code List

6.1 Parts drawing-A1

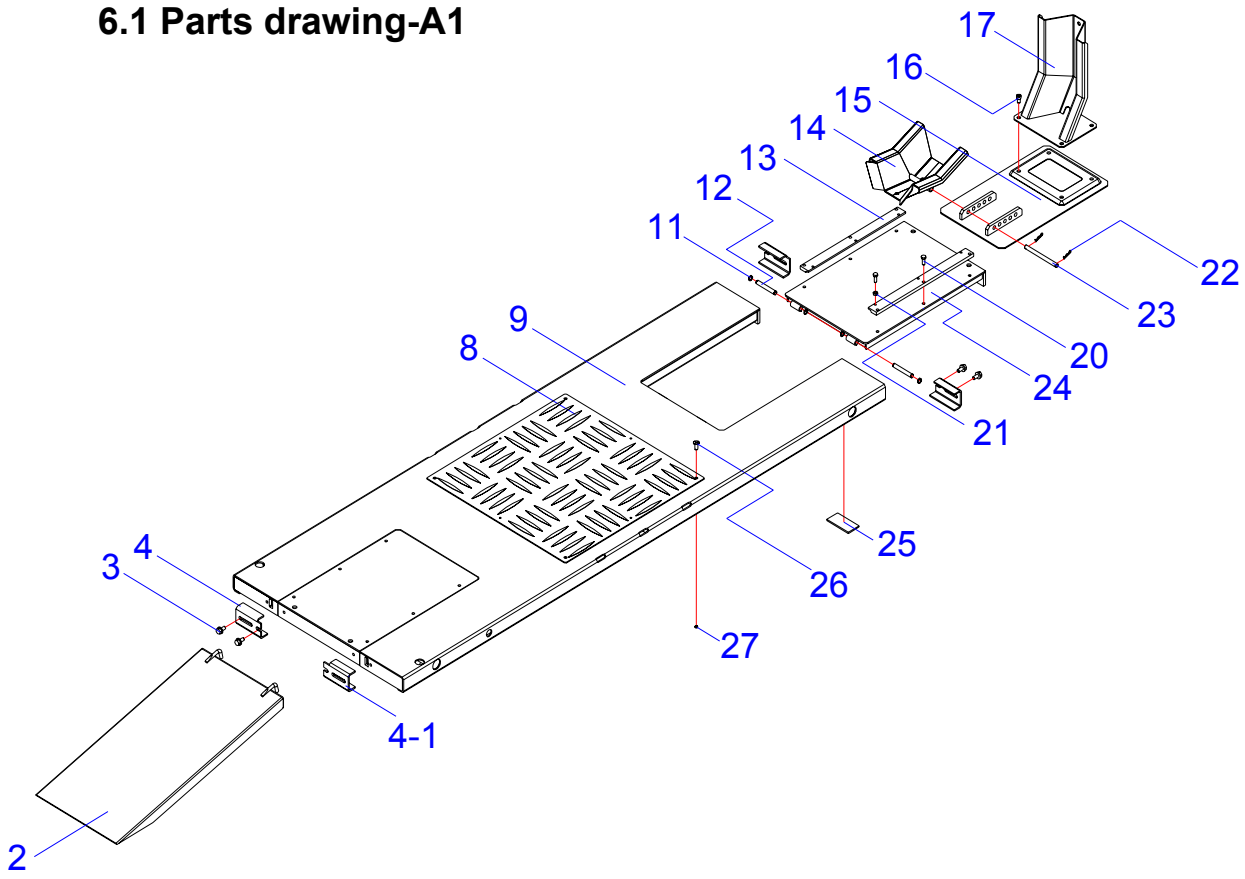

B1000-D
MOTORCYCLE SCISSOR LIFT

6.2 Parts drawing-A2

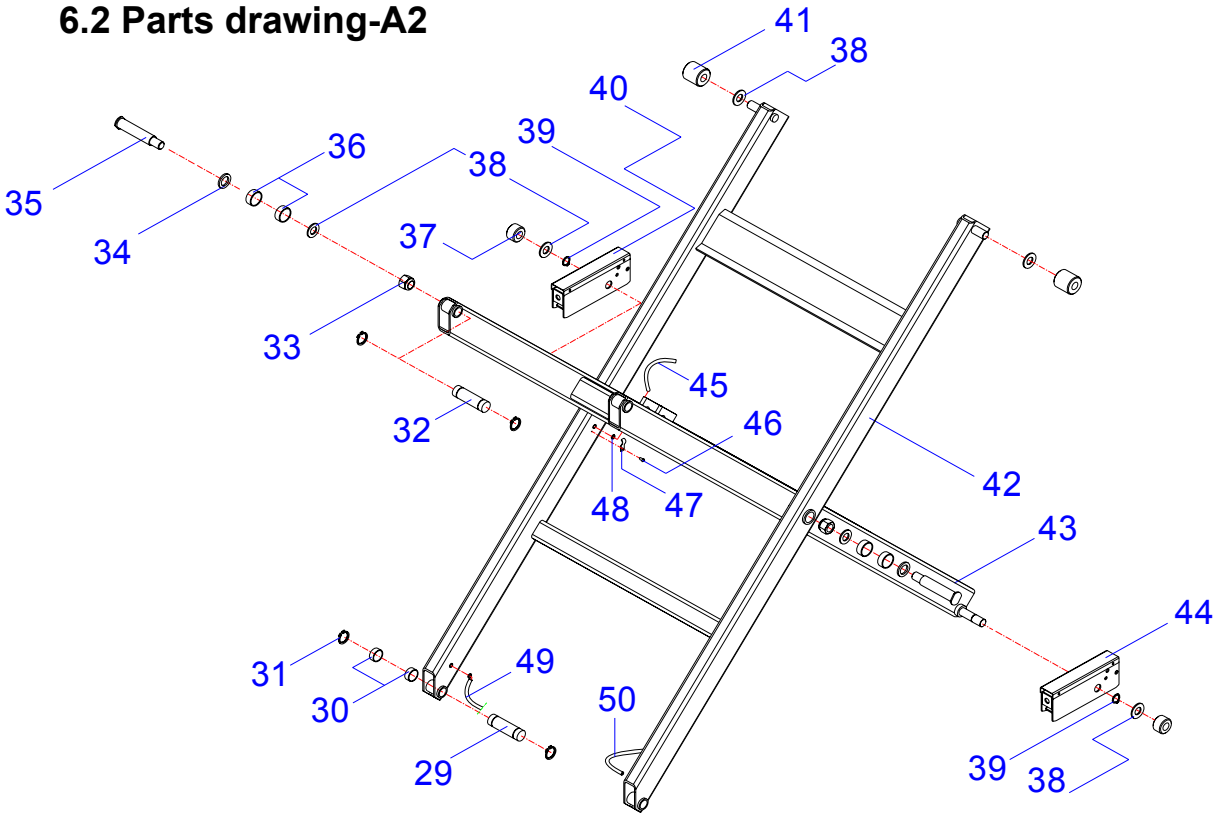

6.3 Parts drawing-A3

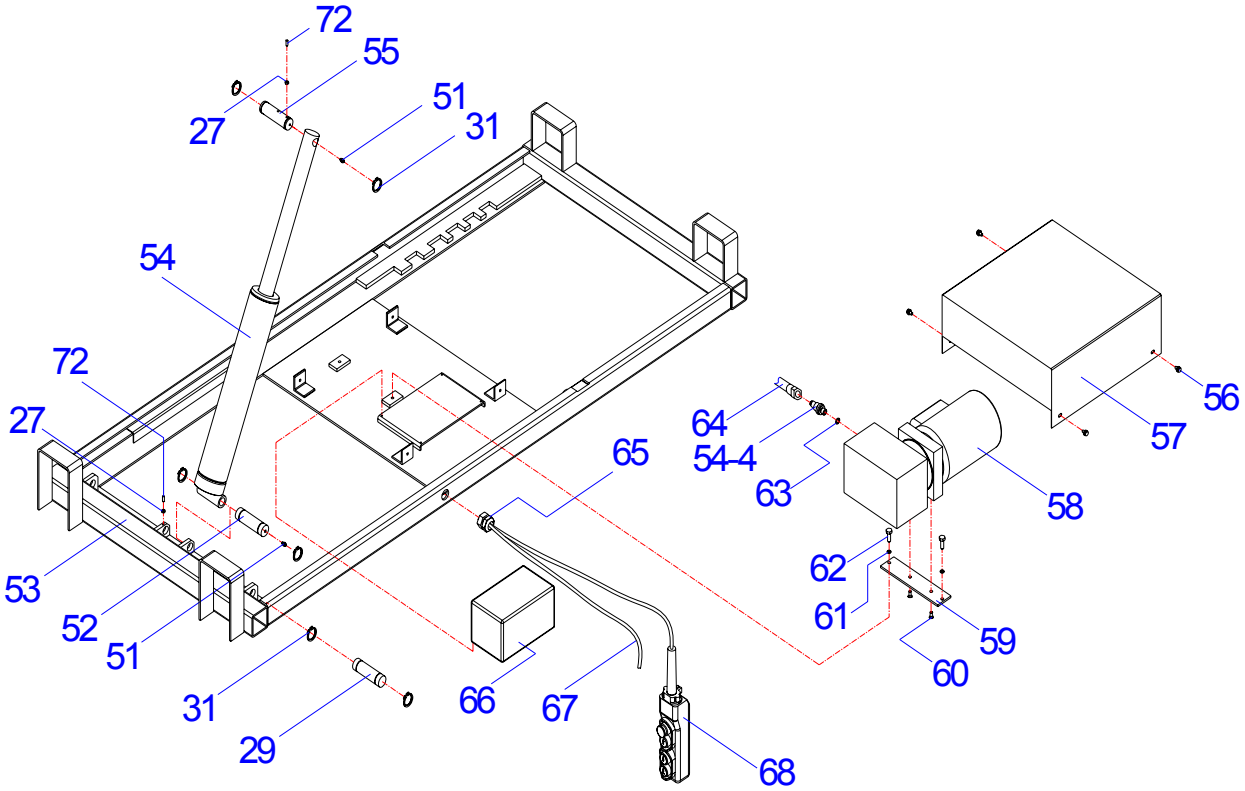

R S Workshop Equipment Unit 28, Barnwell Manor Industrial Estate, Barnwell
01832 741007 - rsworkshopequipment.co.uk

B1000-D
MOTORCYCLE SCISSOR LIFT

6.4 Parts drawing-A4

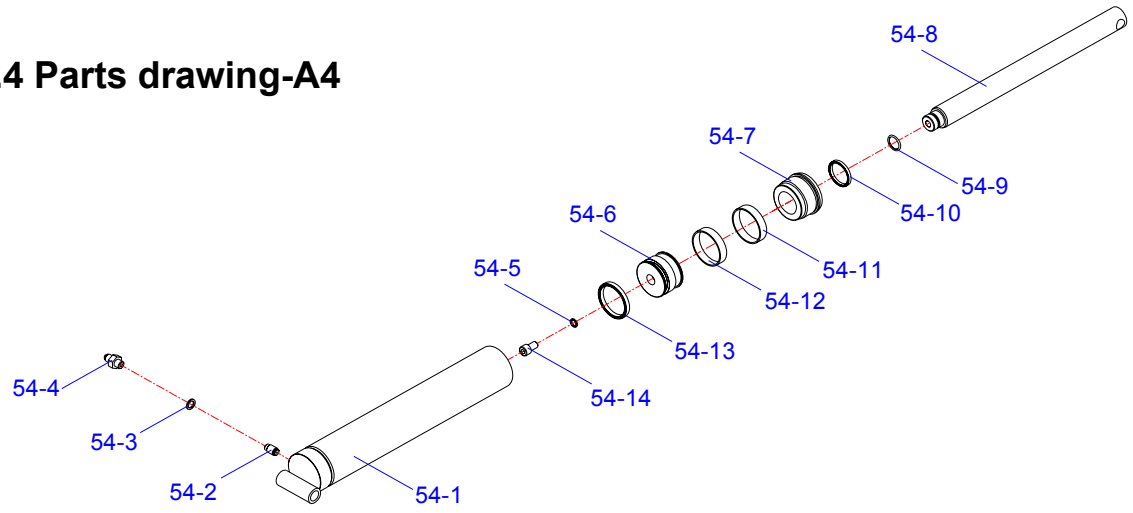

6.5 Parts drawing-A5

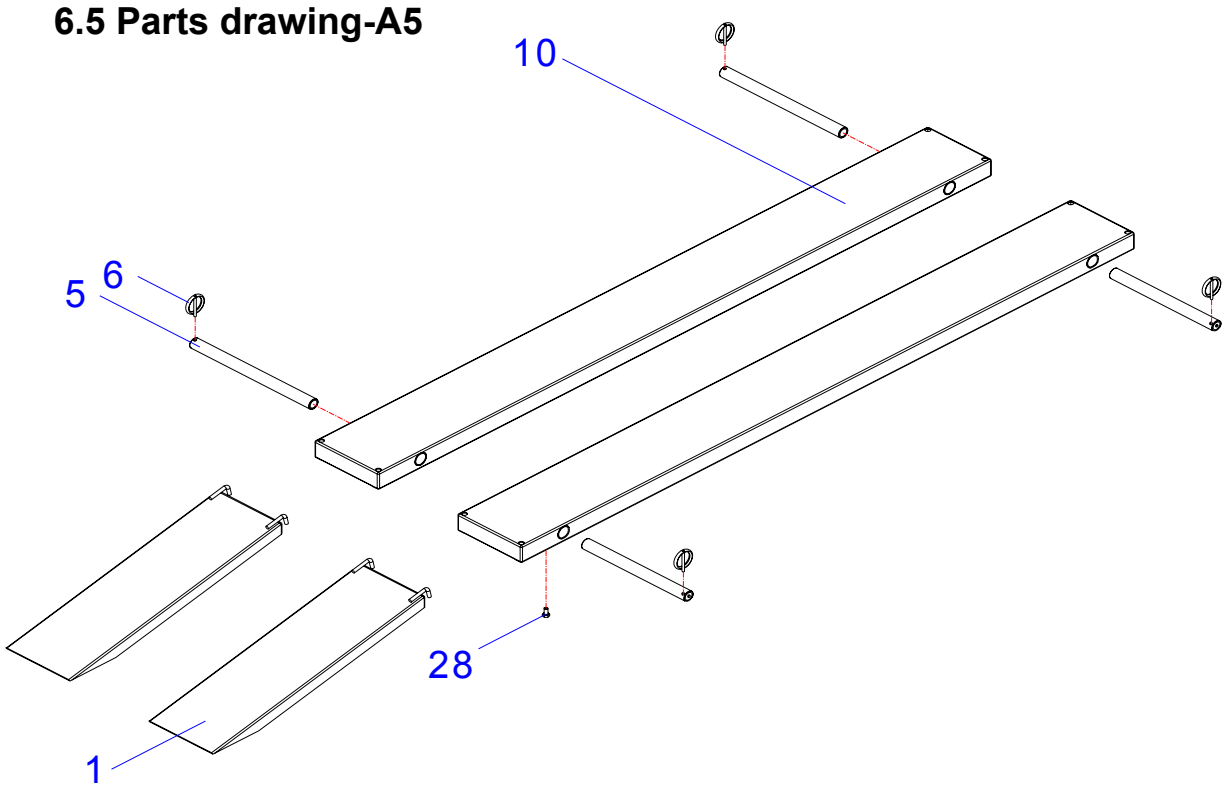

R S Workshop Equipment Unit 28, Barnwell Manor Industrial Estate, Barnwell
01832 741007 - rsworkshopequipment.co.uk

B1000-D
MOTORCYCLE SCISSOR LIFT

6.6 Parts drawing-A6

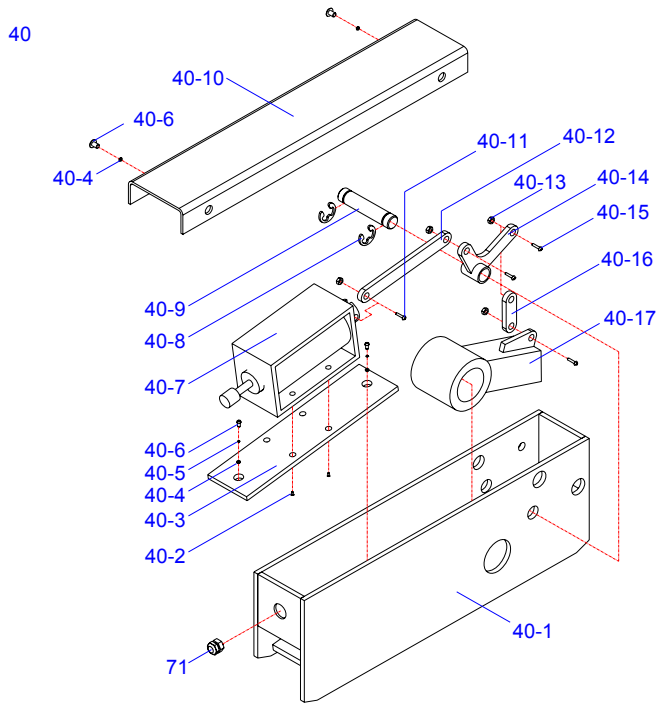

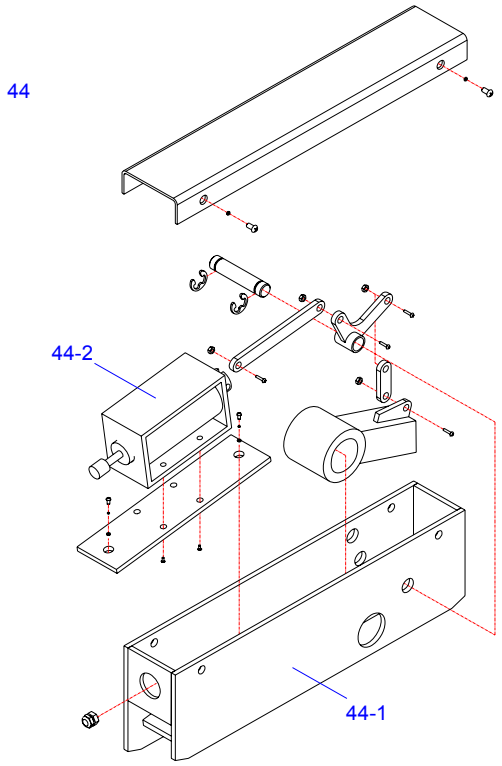

R S Workshop Equipment Unit 28, Barnwell Manor Industrial Estate, Barnwell
01832 741007 - rsworkshopequipment.co.uk

B1000-D
MOTORCYCLE SCISSOR LIFT

6.7 Parts code list -A

ITEM	CODE	DESCRIPTION	QTY
1	JP24-00015-000	side ramp	2
2	JP24-00014-000	middle ramp	1
3	5117-10020-000	screw	8
4	JP24-00019-000	fixing plate 1#	2
4-1	JP24-00027-000	fixing plate 2#	2
5	JP24-00022-000	connecting rod	4
6	JP04-00005-000	pin	4
8	JP24-00008-000	aluminum plate	1
9	JP24-01000-000	platform	1
10	JP24-12000-000	side board	2
11	5304-00012-000	circlip	8
12	JP24-00025-000	hinge shaft	4
13	JP24-00021-000	sliding slot	2
14	JP24-08000-000	wheel slot	1
15	JP24-07000-000	sliding plate	1
16	5105-10014-000	screw	4
17	JP24-09000-000	wheel stop	1
20	5103-08025-000	bolt	16
21	5202-00008-000	nut	6
22	JP24-00018-000	βpin	2
23	JP24-00020-000	shaft	1
24	JP24-06000-000	hinged board	2
25	JP24-01007-000	rubber board	4
26	5107-05014-000	screw	8
27	5206-00005-000	selflock nut	10
28	5121-10016-000	wing nut	8
29	JP24-00001-000	shaft 1#	2
30	5603-20025-000	oilless bearing	8
31	5304-00020-000	circlip	12
32	JP24-00002-000	shaft 2#	2
33	5206-00020-000	selflock nut	2

B1000-D
MOTORCYCLE SCISSOR LIFT

34	5302-00025-000	flat washer	2
35	JP24-00003-000	bolt	2
36	JP24-02006-000	oilless bearing	8
37	JP24-00005-000	down roller	2
38	5302-00020-000	flat washer	6
39	5304-00025-000	circlip	2
40	JP24-14000-000	left lock	1
40-1	JP24-14100-000	left lock frame	1
40-2	5107-03008-000	screw	8
40-3	JP24-13004-000	supporting board	2
40-4	5302-00005-000	flat washer	8
40-5	5303-00005-000	spring washer	4
40-6	5110-05012-000	screw	8
40-7	MK01-00300-000	electromagnetic coil 1#	1
40-8	5305-00006-000	E-clip	4
40-9	JP24-13003-000	arm shaft	3
40-10	JP24-00016-000	cover	2
40-11	5110-04020-000	screw	2
40-12	JP24-13001-000	long connecting bat	2
40-13	5206-00004-000	selflock nut	4
40-14	JP24-13200-000	arm	2
40-15	5110-04012-000	screw	6
40-16	JP24-13002-000	short connecting rod	2
40-17	JP24-13300-000	lock tongue	2
41	JP24-00004-000	upper roller	2
42	JP24-03000-000	out frame	1
43	JP24-02000-000	inside frame	1
44	JP24-13000-000	right lock	1
44-1	JP24-13100-000	right lock frame	1
44-2	MK01-00400-000	electromagnetic coil 2#	1
45	JP24-00010-000	spring sheath 1#	4
46	5110-04006-000	screw	10
47	JP24-00009-000	fixing board	10
48	MK01-00003-000	wire ring	8
49	JP24-00012-000	spring sheath 3#	1

B1000-D
MOTORCYCLE SCISSOR LIFT

50	JP24-00011-000	spring sheath 2#	1
51	JP02-00007-000	grease nip	2
52	JP24-00024-000	cylinder lond shaft	1
53	JP24-05000-000	basement	1
54	JP24-04000-000	cyliner	1
54-1	JP24-04100-000	cylineder body	1
54-2	JP24-04005-000	pressure valve	1
54-3	5903-00014-000	combined washer	1
54-4	JP24-04006-000	oil fitting	2
54-5	5303-00012-000	spring washer	1
54-6	JP24-04002-000	piston	1
54-7	JP24-04004-000	guide ring	1
54-8	JP24-04007-000	piston rod	1
54-9	5901-00244-000	O-ring	1
54-10	5906-00040-000	dust ring	1
54-11	JP24-04008-000	guide belt ring	1
54-12	JP24-04001-000	guide belt ring	1
54-13	5905-00060-000	seal ring	1
54-14	5105-12020-000	screw	1
55	JP24-00023-000	cylinder short shaft	1
56	5117-06008-000	screw	4
57	JP24-00006-000	cover	1
58	ABZ14S-00	motor pump	1
59	JP24-00026-000	pump fixing plate	1
60	5120-08010-000	screw	2
61	5303-00008-000	spring washer	2
62	5103-08014-000	bolt	2
63	5901-00010-000	o-ring	1
64	JP24-00007-000	hose	1
65	DJ02-00009-000	cable nut	1
66	MK010S-00	control box	1
67	MK01-00002-000	power cable	1
68	MK01-00200-000	remote controller	1
69	JP24-00013-000	tie strip	1
71	JK01-00003-000	cable nut	2
72	5109-05020-000	threaded pin	2

B1000-D
MOTORCYCLE SCISSOR LIFT

6.11Parts code list -C

ITEM	CODE	DESCRIPTION	QTY
1	BZ14-05001-000	single phase motor	1
2	BZ01-04010-000	close nut	1
3	BZ01-04008-000	close nut	1
4	5901-00118-000	O-ring	2
5	BZ01-04009-000	spring	1
6	BZ01-04007-000	ball seat	1
7	5601-00635-000	ball	2
8	BZ01-04005-000	ball seat	1
9	BZ01-04002-000	spring	1
10	BZ01-04003-000	threaded pin	1
11	5901-00072-000	O-ring	1
12	BZ01-04016-000	special washer	1
13	BZ01-04004-000	lock nut	1
14	BZ01-04-12-000	protect cap	1
15	BZ14-00001-000	return pipe	1
16	5901-01150-000	O-ring	1
17	5901-01120-000	O-ring	1
18	5901-00008-000	O-ring	1
19	BZ02-03000-000	gear pump	1
20	5105-08075-000	bolt	2
21	5117-06008-000	selflock nut	4
22	BZ14-02100-000	tank	2
23	QY02-03002-000	vetilating cover	1
24	QY02-03002-000	combined seal washer	1
25	BZ14-01001-000	sucking pipe	1
26	BZ01-01002-000	strainer	1
27	BZ14-00003-000	joint	1
28	BZ14-04200-000	valve cable	1
29	BZ20-04100-000	electro magnetic valve	1
30	5901-00160-000	O-ring	1
31	BZ01-04011-000	strainer	1
32	5901-00095-000	O-ring	1

B1000-D
MOTORCYCLE SCISSOR LIFT

6.10 Parts drawing - C

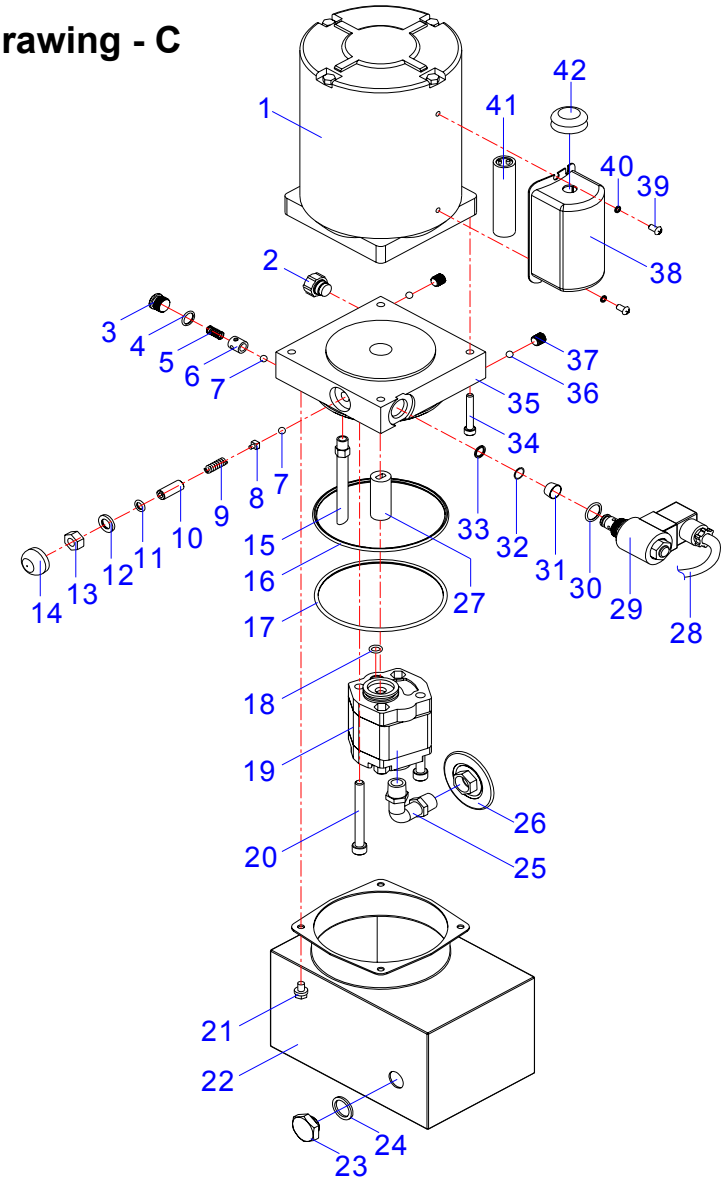

B1000-D
MOTORCYCLE SCISSOR LIFT

6.9 Parts code list -B

ITEM	CODE	DESCRIPTION	QTY
1	MK01-00001-000	case	1
2	JK01-00004-000	cable nut	2
3	DJ02-00007-000	cable nut	3
4	MK01-00101-000	bottom board	1
5	JK11-10006-000	transformer	1
6	JK01-10030-000	tapping screw	6
7	DK20-10018-000	fixing board	2
8	DK20-10019-000	terminal	10
9	5301-00005-000	flat washer	4
10	JK01-10029-000	tapping screw	8
11	MK01-00105-000	rail	1
12	JK01-10010-100	fuse 1A	2
13	DK05-10008-000	fuse 10A	2
14	DK09-10007-000	fuse seat	1
15	JK01-10009-001	fuse seat board	1
16	JK01-10009-000	fuse seat	2
17	5110-04004-000	tapping screw	2
18	MK01-00102-000	bridge rectifier	1
19	JK01-10031-000	tapping screw	2
20	JK01-10005-000	contactor	1
21	JK01-10020-000	cable ring	2
22	JK01-10014-000	earthing end	1
23	JK01-JD000-000	earthing sign	1
24	5301-00004-000	flat washer	2
25	5110-04004-000	tapping screw	2

B1000-D
MOTORCYCLE SCISSOR LIFT

6.8 Parts drawing-B

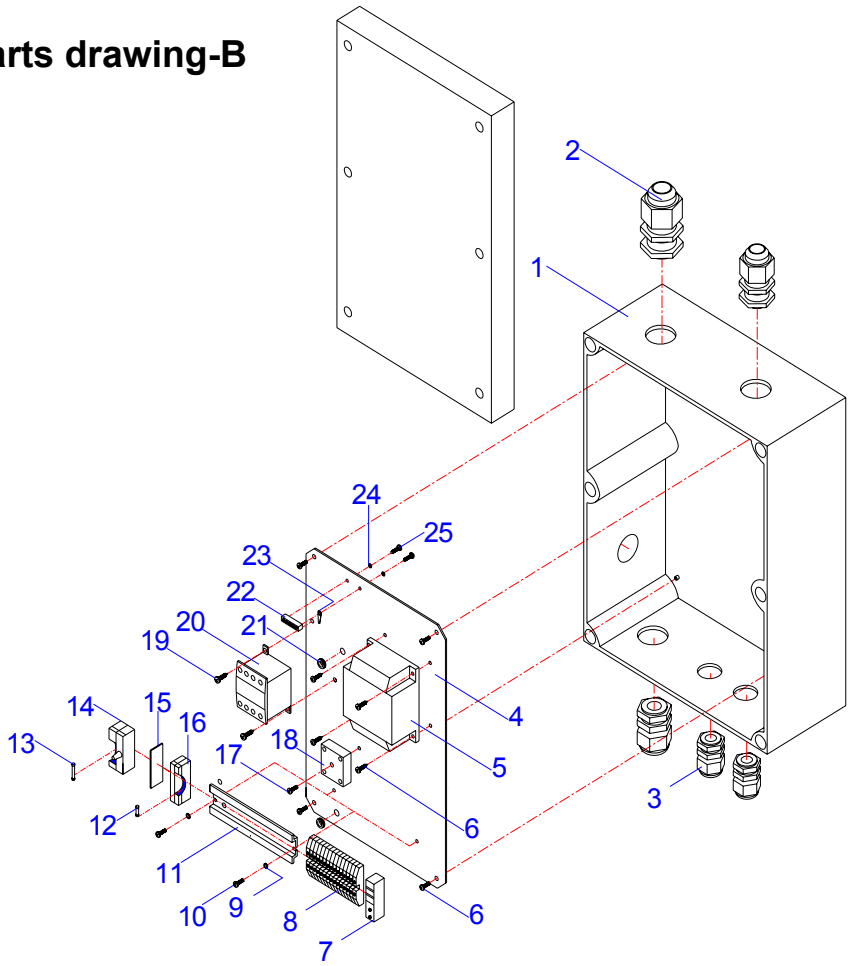

B1000-D
MOTORCYCLE SCISSOR LIFT

33	5901-00125-000	circlip	1
34	5105-06040-000	screw	4
35	BZ30-04001-000	valve block	1
36	5601-00800-000	ball	2
37	BZ01-00002-000	threaded pin	2
38	BZ14-05003-000	capacitor caver	1
39	5110-04010-000	screw	2
40	5302-00004-000	flat washer	2
41	BZ14-05002-000	start capacitor	1
42	BZ14-05004-000	cable nut	1

B1000-D
MOTORCYCLE SCISSOR LIFT

6. Troubleshooting Guide

Problem	Cause	Solution
Motor does not run.	1. Blown fuse or circuit breaker 2. Incorrect voltage to motor 3. Motor up switch burned out. 4. Overhead limit switch burned out. 5. Motor windings burned out.	1. Replace blown fuse or reset circuit breaker. 2. Supply correct voltage to motor. 3. Replace switch. 4. Replace switch. 5. Replace motor.
Motor runs but will not raise lift.	1. Open lowering valve. 2. Pump sucking air 3. Suction stub off pump. 4. Low oil level	1. Repair or replace lowering valve. 2. Tighten all suction line fittings. 3. Replace suction stub. 4. Fill tank with AW32 or AW46
Motor runs-will raises unloaded lift but will not raise motorcycle.	1. Motor running on low voltage 2. Lowering valve looses. 3. Relief valve opens in advance. 4. Overloading lift	1. Supply correct voltage to motor. 2. Clean lowering valve. 3. Reset the pressure of relief valve. 4. Check vehicle weight and/or balance vehicle weight on lift.
Lift slowly settles down.	1. Check valve is blocked. 2. Lowering valve isn't opened fully.	1. Clean check valve. 2. Clean lowering valve.
Slow lifting speed	1. Air mixed with oil. 2. Suction stub looses 3. Relief valve opens in advance 4. Lowering valve looses	1. Change oil to AW32 or AW46 2. Tighten all suction line fittings. 3. Reset the pressure of relief valve 4. Clean lowering valve
Locking latches do not engage.	1. Latch shafts rusted. (Usually occurs on outside installation or in high humidity areas such as vehicle wash bays.) 2. Release the lock without lifting 3. Cable broken or bad connection	1. Remove covers, oil latch mechanism. Depress latch release handle several times to allow oil to coat shaft. 2. Lifting a short distance first. 3. Check the cable or replace